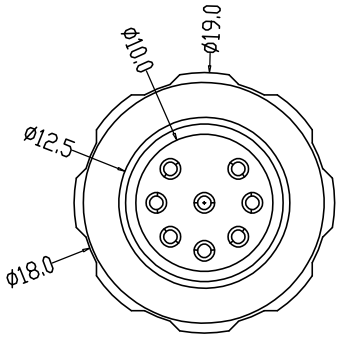

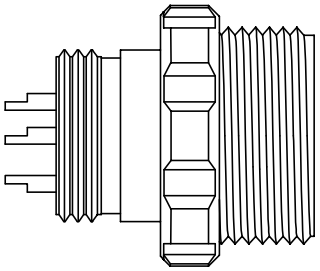

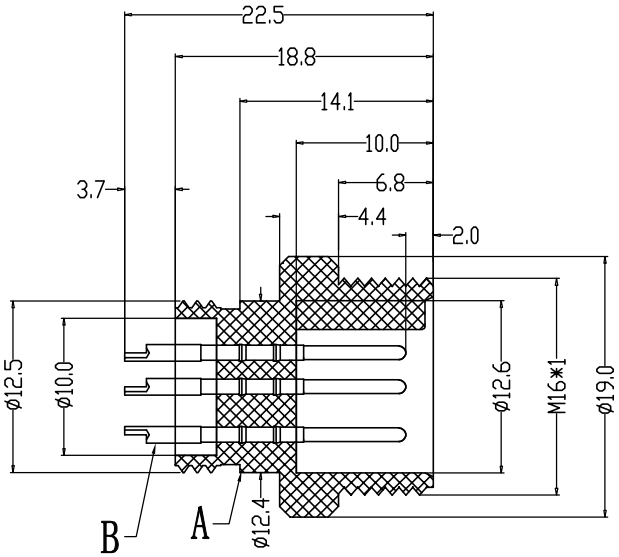

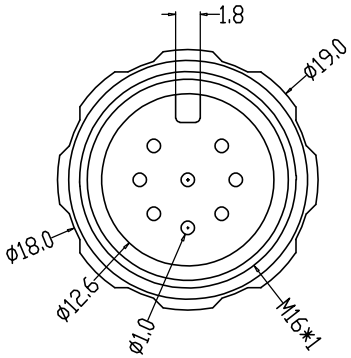

Engagement force	≤50N	Rated volage	30V
Disengagement force	≥10N	Rated current	4A
Mechanical lifespan	≥500	Insulation resistance	≥1000M Ω
IP rating	IP67	Contact resistance	≤10m Ω
Flammability	UL94 V-0	Operation Temperature	-25° C~105°

	PARTS	MATERIALS	TREATMENT	AMOUNT
A	HOUSING	PA66+GF	BLACK	1
B	CONTACT	BRASS	GOLD PLATED	8
C				
D				
E				
F				

Dongguan Changjun ElectronicsCo.,LTD
东莞市昌骏电子有限公司

TOLERANCE
.xxx ±0.05
.xx ±0.10
.x ±0.30
x ±0.50
ANGLE ± 1°

TITLE: M16防水8P线端公头Z款

PART NO: CJ-M16ZXB8-M01		DRAWING NO.: CP-M16Z005		
SHEET: 1 / 1	SCALE: 1 : 1	UNIT: mm	SIZE: A4	REV A/0
DRAWN: Xie Wenjun	CHECK: Long Jichang	DATE: 2023-03-15		