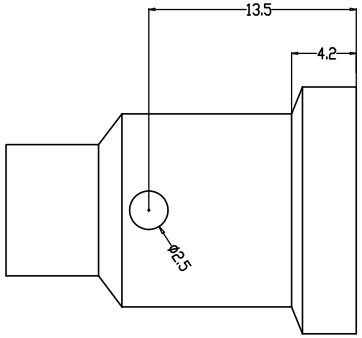

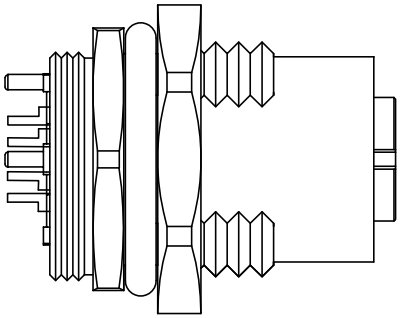

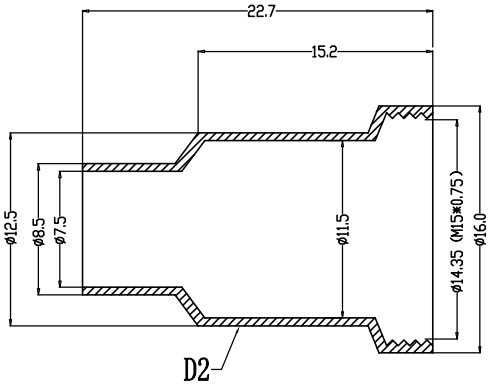

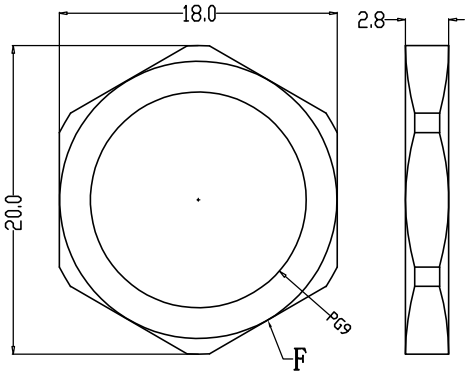

Recommended Panel Cut-out

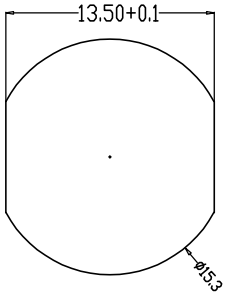

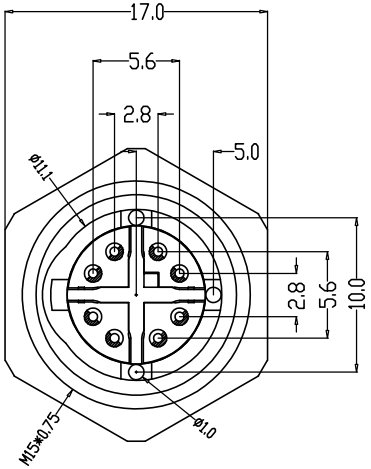

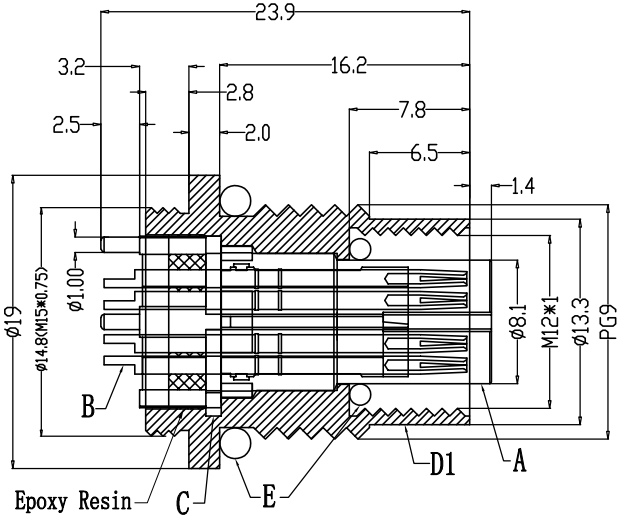

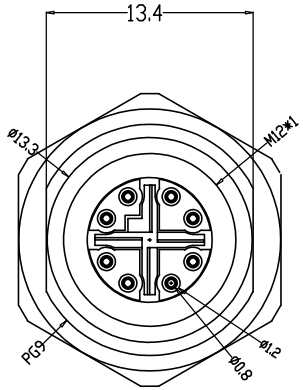

Engagement force	≤50N	Rated volage	48V
Disengagement force	≥10N	Rated current	0.5A
Mechanical lifespan	≥500	Insulation resistance	≥1000M Ω
IP rating	IP67/IP68	Contact resistance	≤10m Ω
Flammability	UL94 V-0	Operation Temperature	-40° C~105° C

	PARTS	MATERIALS	TREATMENT	AMOUNT
A	HOUSING	PA66+GF	SPECIFY COLOR	1
B	CONTACT	BRONZE	GOLD PLATED	8
C	OUTER CONTACT	ZINC ALLOY	NICKL PLATED	1
D	SHIELD	BRASS	NICKL PLATED	1+1
E	O-RING	EPDM	BLACK	2
F	NUT	ZINC ALLOY	NICKL PLATED	1

Dongguan Changjun ElectronicsCo.,LTD
东莞市昌骏电子有限公司

TOLERANCE
.xxx ±0.05
.xx ±0.10
.x ±0.30
x ±0.50
ANGLE ± 1°

TITLE: M12防水8P线端母座X-CODE 前锁面板式PG9 SW17T+

PART NO: CJ-M12XXX8X-F01Q-PG9SW17T+

DRAWING NO.: CP-M120323

SHEET: 1 / 1 | SCALE: 1 : 1 | UNIT: mm | SIZE: A4 | REV A/0

DRAWN: Xie Wenjun | CHECK: Long Jichang | DATE: 2022-01-05