由 Autodesk 教育版产品制作

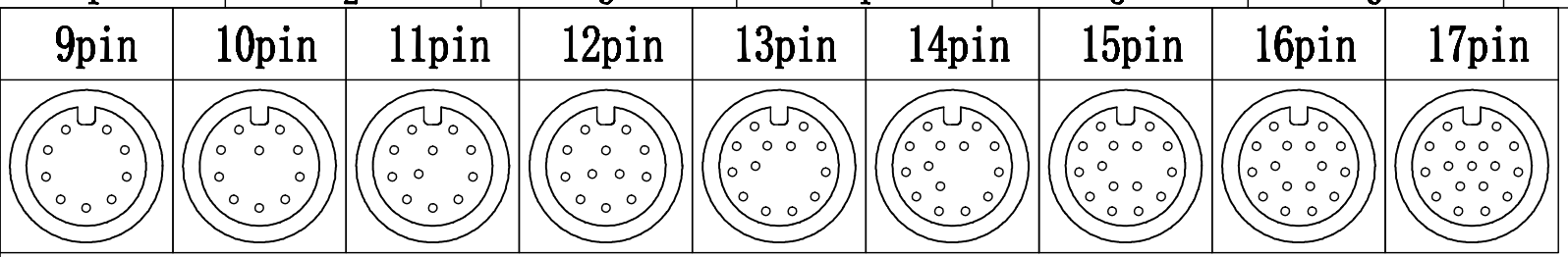

Recommended Panel Cut-out

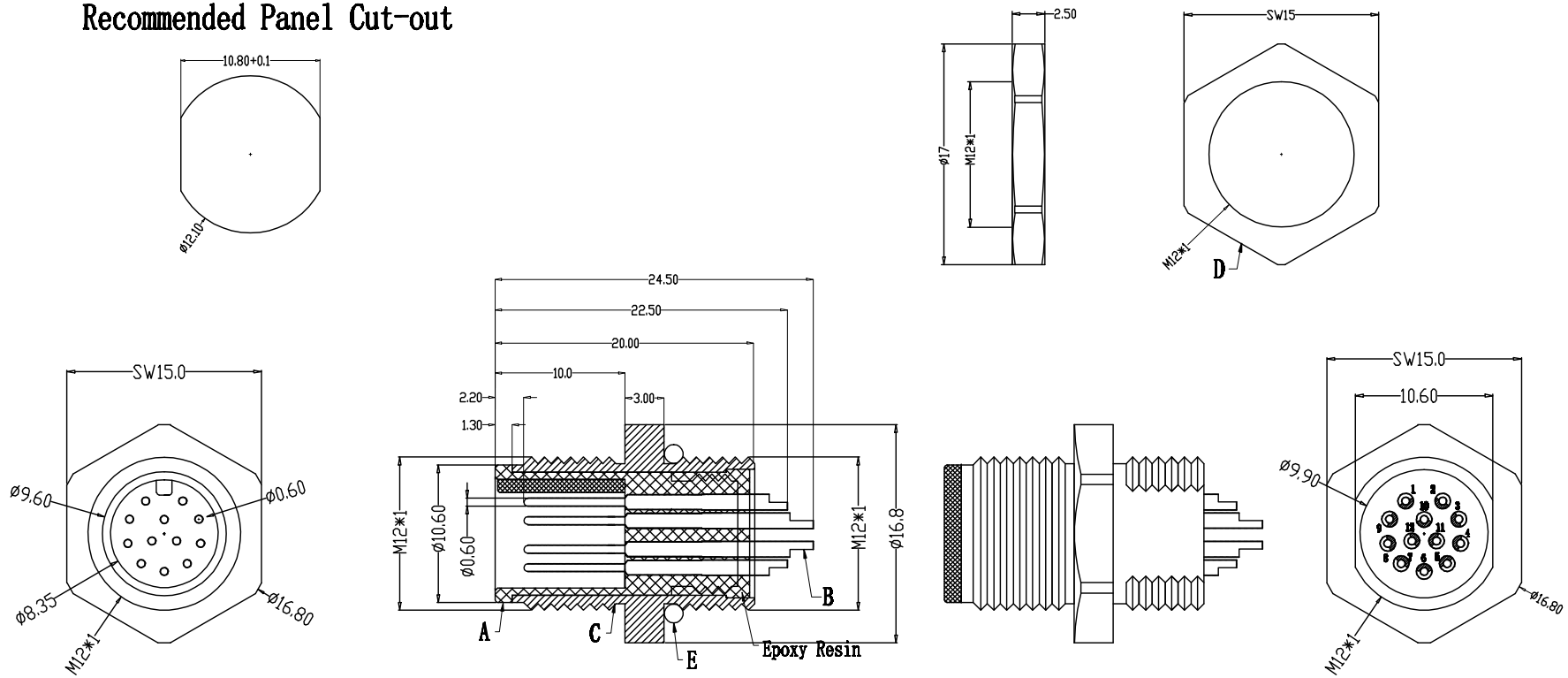

Engagement force	≤50N	Rated volage	30V
Disengagement force	≥10N	Rated current	1.5A
Mechanical lifespan	≥500	Insulation resistance	≥1000MΩ
IP rating	IP67/IP68	Contact resistance	≤10mΩ
Flammability	UL94 V-0	Operation Temperature	-40° C~105° C

	PARTS	MATERIALS	TREATMENT	AMOUNT
A	HOUSING	PA66+GF	SPECIFY COLOR	1
B	CONTACT	BRASS	GOLD PLATED	9~17
C	OUTER CONTACT	BRASS	NICKL PLATED	1
D	NUT	BRASS	NICKL PLATED	1
E	O-RING	EPDM	BLACK	1
F				

Dongguan Changjun ElectronicsCo.,LTD
东莞市昌骏电子有限公司

TOLERANCE .xxx ±0.05 .xx ±0.10 .x ±0.30 x ±0.50 ANGLE ± 1°	TITLE: M12防水9~17P线端公头 后锁面板式M12 SW15T			
	PART NO: CJ-M12C3X(9~17)-M01H-M12FSW15T	DRAWING NO.: CP-M120037		
	SHEET: 1 / 1	SCALE: 1 : 1	UNIT: mm	SIZE: A4 / REV A/0
	DRAWN: Xie Wenjun	CHECK: Long Jichang	DATE: 2022-01-05	

由 Autodesk 教育版产品制作