由 Autodesk 教育版产品制作

pin位	3pin	4pin	5pin
图 形	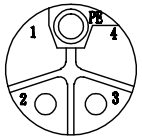	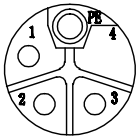	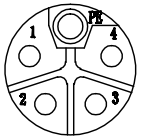

Recommended Panel Cut-out

M16*1.5 PG9

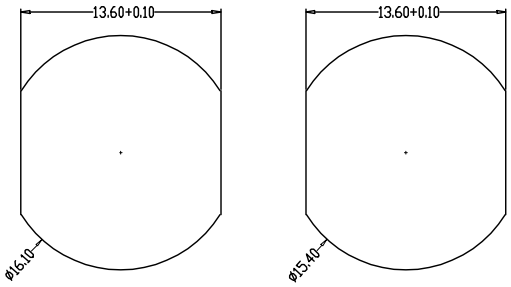

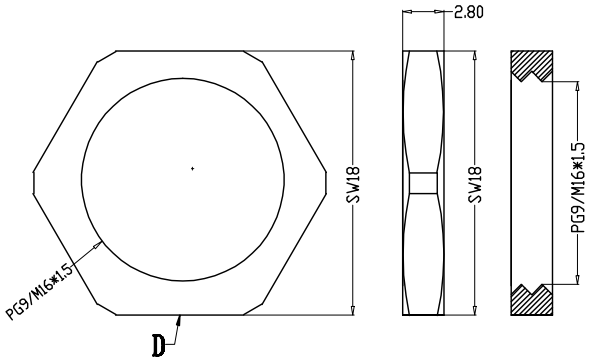

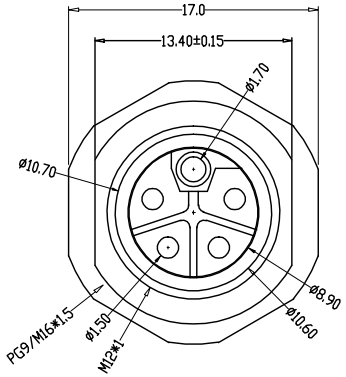

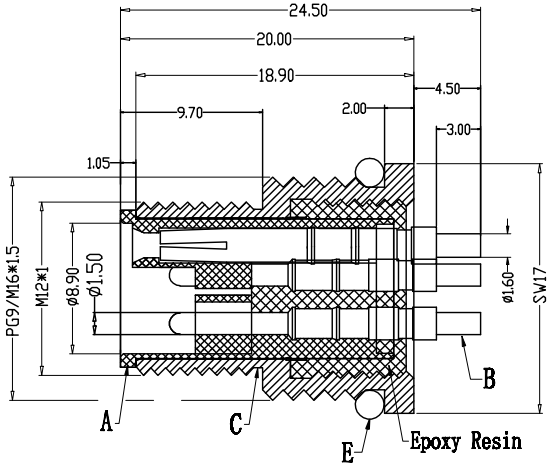

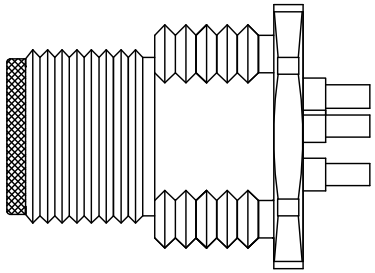

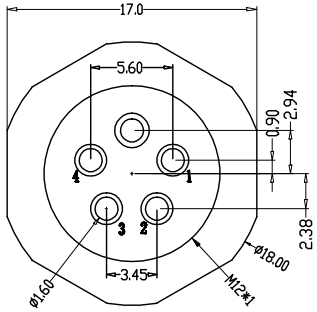

Engagement force	≤50N	Rated volage	63V
Disengagement force	≥10N	Rated current	16A
Mechanical lifespan	≥500	Insulation resistance	≥1000MΩ
IP rating	IP67/IP68	Contact resistance	≤10mΩ
Flammability	UL94 V-0	Operation Temperature	-40° C~105° C

	PARTS	MATERIALS	TREATMENT	AMOUNT
A	HOUSING	PA66+GF	SPECIFY COLOR	1
B	CONTACT	BRASS	GOLD PLATED	3~5
C	OUTER CONTACT	BRASS	NICKL PLATED	1
D	NUT	BRASS	NICKL PLATED	1
E	O-RING	EPDM	BLACK	1
F				

Dongguan Changjun ElectronicsCo.,LTD
东莞市昌骏电子有限公司

TOLERANCE
.xxx ±0.05
.xx ±0.10
.x ±0.30
x ±0.50
ANGLE ± 1°

TITLE: M12防水线端公头L-CODE 前横面板式PG9/M16 SW17T-24.5L

PART NO: CJ-M12BXXCF*N01-M0010-P09/M16SW17T-24.5L

DRAWING NO.: CP-M120180

SHEET:	SCALE:	UNIT:	SIZE:	REV
1 / 1	1 : 1	mm	A4	A/0

DRAWN:	CHECK:	DATE:
Xie Wenjun	Long Jichang	2022-05-25

由 Autodesk 教育版产品制作