由 Autodesk 教育版产品制作

| PIN位 | 2PIN | 3PIN4改3 | 4PIN | 5PIN正方形 | 6PIN | 7PIN | 8PIN |
|---|---|---|---|---|---|---|---|
| A-CODE 图 形 | | | | | | | |
| B-CODE 图 形 | | | | | | | |
| D-CODE 图 形 | | | | | | | |

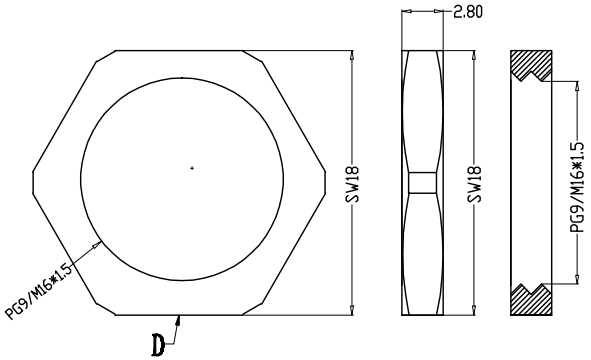


Recommended Panel Cut-out

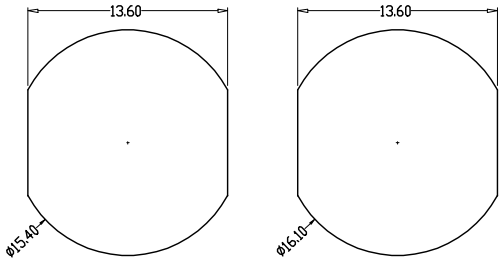


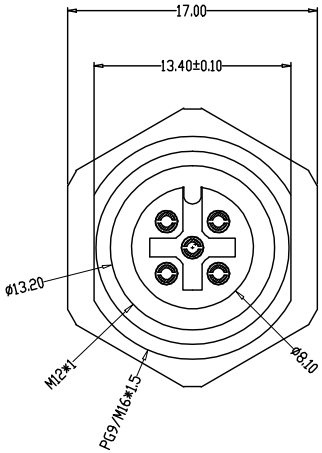


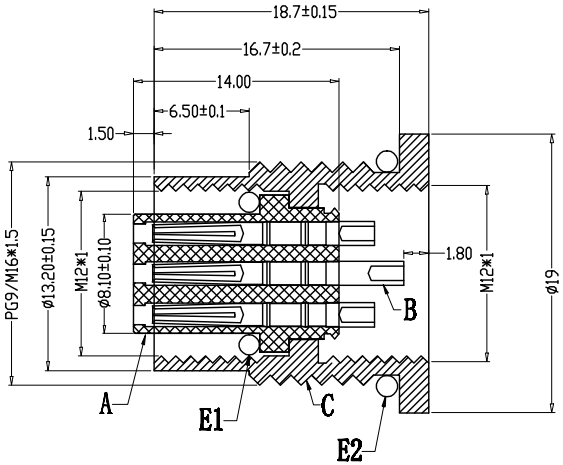


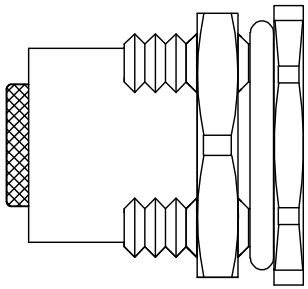

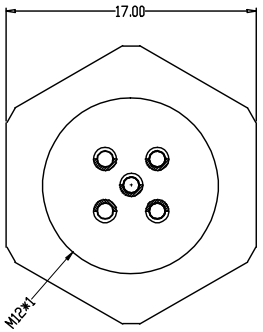


| | | | |
|---|---|---|---|
| Engagement force | ≤50N | Rated volage | 2-5pin:60V<br>6-8pin:30V |
| Disengagement force | ≥5N | Rated current | 2-5pin:4A<br>6-8pin:2A |
| Mechanical lifespan | ≥500 | Insulation resistance | ≥1000MΩ |
| IP rating | IP67/IP68 | Contact resistance | ≤10mΩ |
| Flammability | UL94 V-0 | Operation Temperature | -40° C~105° C |

| | PARTS | MATERIALS | TREATMENT | AMOUNT |
|---|---|---|---|---|
| A | HOUSING | PA66+GF | SPECIFY COLOR | 1 |
| B | CONTACT | BRONZE | GOLD PLATED | 2~8 |
| C | OUTER CONTACT | BRASS | NICKL PLATED | 1 |
| D | NUT | BRASS | NICKL PLATED | 1 |
| E | O-RING | EPDM | BLACK | 2 |
| F | | | | |

Dongguan Changjun ElectronicsCo.,LTD
东莞市昌骏电子有限公司

TOLERANCE
.xxx ±0.05
.xx ±0.10
.x ±0.30
x ±0.50
ANGLE ±1°

TITLE: M12防水2~8P线端母头 前锁面板式PG9/M16 SW17T后螺胶

PART NO: CJ-M12CH(C)*8A-PG16-PG9/M16SW17T

DRAWING NO.: CP-M120013

SHEET: 1 / 1 | SCALE: 1 : 1 | UNIT: mm | SIZE: A4 | REV A/0

DRAWN: Xie Wenjun | CHECK: Long Jichang | DATE: 2022-01-05

由 Autodesk 教育版产品制作