由 Autodesk 教育版产品制作

pin位	2pin	3pin	4pin	5pin	6pin	7pin	8pin
X 值	1.00	1.00	1.00	1.00	0.80	0.80	0.80
A-CODE 图 形							
B-CODE 图 形							
D-CODE 图 形							

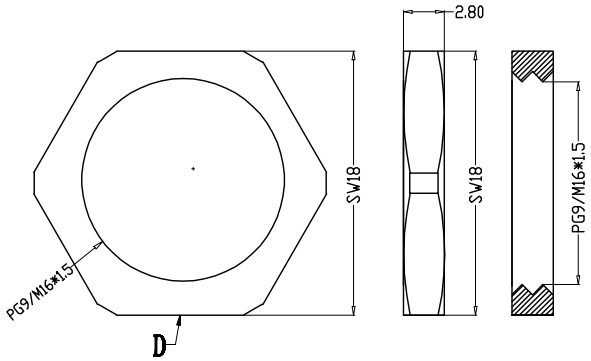

Recommended Panel Cut-out

M16*1.5 PG9

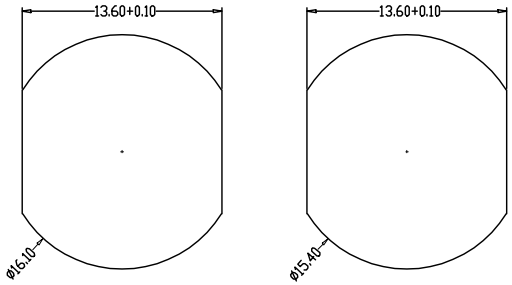

6~8PIN

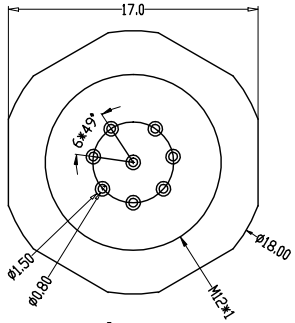

2~5PIN

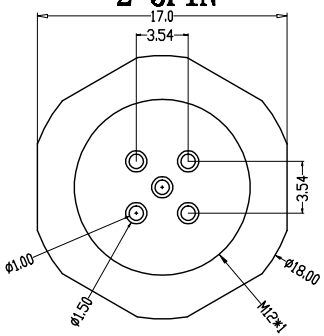

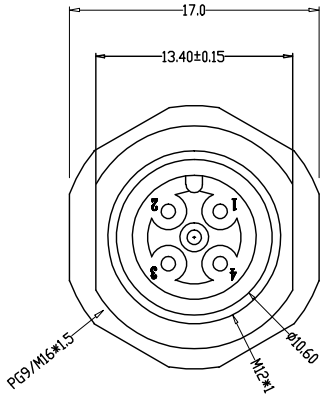

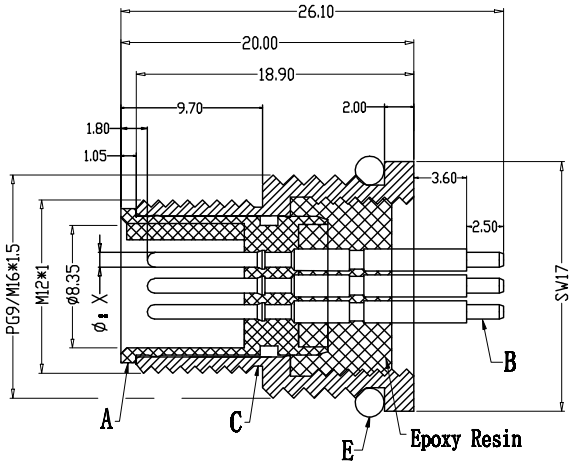

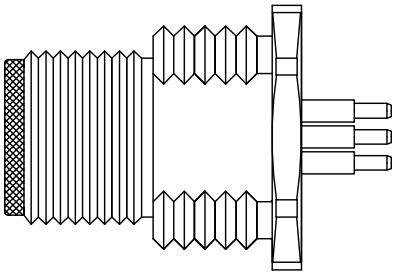

Engagement force	≤50N	Rated volage	2-5pin:60V 6-8pin:30V
Disengagement force	≥5N	Rated current	2-5pin:4A 6-8pin:2A
Mechanical lifespan	≥500	Insulation resistance	≥1000MΩ
IP rating	IP67/IP68	Contact resistance	≤10mΩ
Flammability	UL94 V-0	Operation Temperature	-40° C~105° C

	PARTS	MATERIALS	TREATMENT	AMOUNT
A	HOUSING	PA66+GF	SPECIFY COLOR	1
B	CONTACT	BRASS	GOLD PLATED	2~8
C	OUTER CONTACT	BRASS	NICKL PLATED	1
D	NUT	BRASS	NICKL PLATED	1
E	O-RING	EPDM	BLACK	1
F				

Dongguan Changjun ElectronicsCo.,LTD
东莞市昌骏电子有限公司

TOLERANCE
.xxx ±0.05
.xx ±0.10
.x ±0.30
x ±0.50
ANGLE ± 1°

TITLE: M12防水2~8P板端公头 前横面板式PG9/M16 SW17T-26.1L

PART NO: CJ-M12CH(C*8)A-M16-PG9/M16SW17T-26.1L

DRAWING NO.: CP-M120044

SHEET:	SCALE:	UNIT:	SIZE:	REV
1 / 1	1 : 1	mm	A4	A/0

DRAWN:	CHECK:	DATE:
Xie Wenjun	Long Jichang	2022-01-05

由 Autodesk 教育版产品制作