由 Autodesk 教育版产品制作

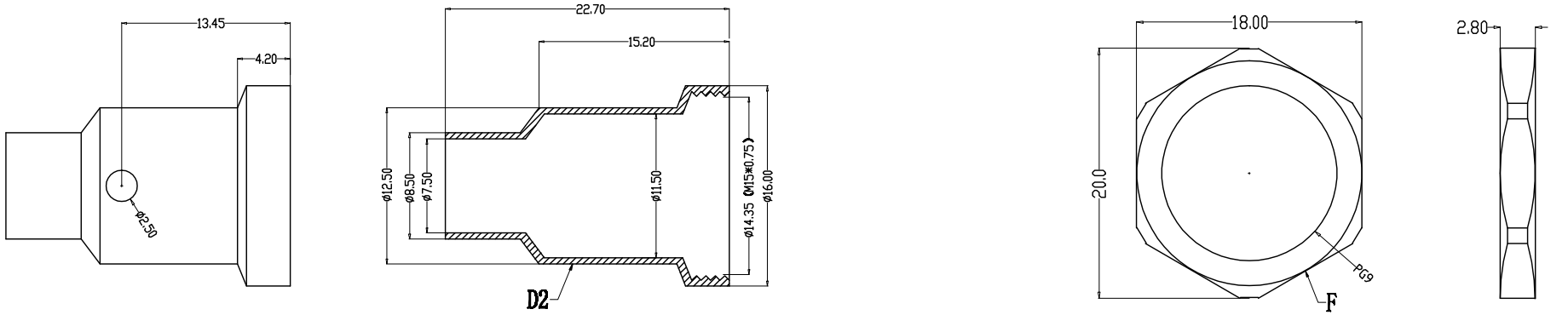

Recommended Panel Cut-out

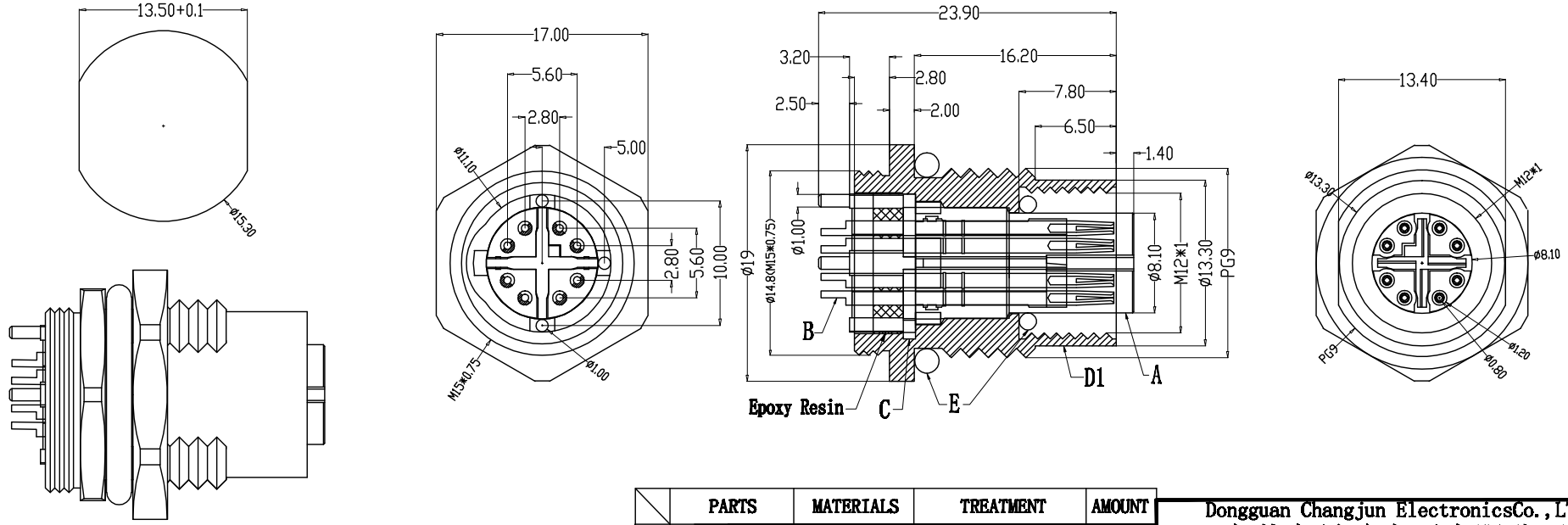

Engagement force	≤50N	Rated volage	48V
Disengagement force	≥10N	Rated current	0.5A
Mechanical lifespan	≥500	Insulation resistance	≥1000MΩ
IP rating	IP67/IP68	Contact resistance	≤10mΩ
Flammability	UL94 V-0	Operation Temperature	-40° C~105° C

	PARTS	MATERIALS	TREATMENT	AMOUNT
A	HOUSING	PA66+GF	SPECIFY COLOR	1
B	CONTACT	BRONZE	GOLD PLATED	8
C	OUTER CONTACT	ZINC ALLOY	NICKL PLATED	1
D	SHIELD	BRASS	NICKL PLATED	1+1
E	O-RING	EPDM	BLACK	2
F	NUT	ZINC ALLOY	NICKL PLATED	1

Dongguan Changjun ElectronicsCo.,LTD
东莞市昌骏电子有限公司

TOLERANCE
.xxx ±0.05
.xx ±0.10
.x ±0.30
x ±0.50
ANGLE ±1°

TITLE: M12防水8P线端母座X-CODE 前锁面板式PG9 SW17T

PART NO: CJ-M12XXX8X-F01Q-PG9SW17T

DRAWING NO.: CP-M120093

SHEET: 1 / 1 | SCALE: 1 : 1 | UNIT: mm | SIZE: A4 | REV A/0

DRAWN: Xie Wenjun | CHECK: Long Jichang | DATE: 2022-01-05

由 Autodesk 教育版产品制作