由 Autodesk 教育版产品制作

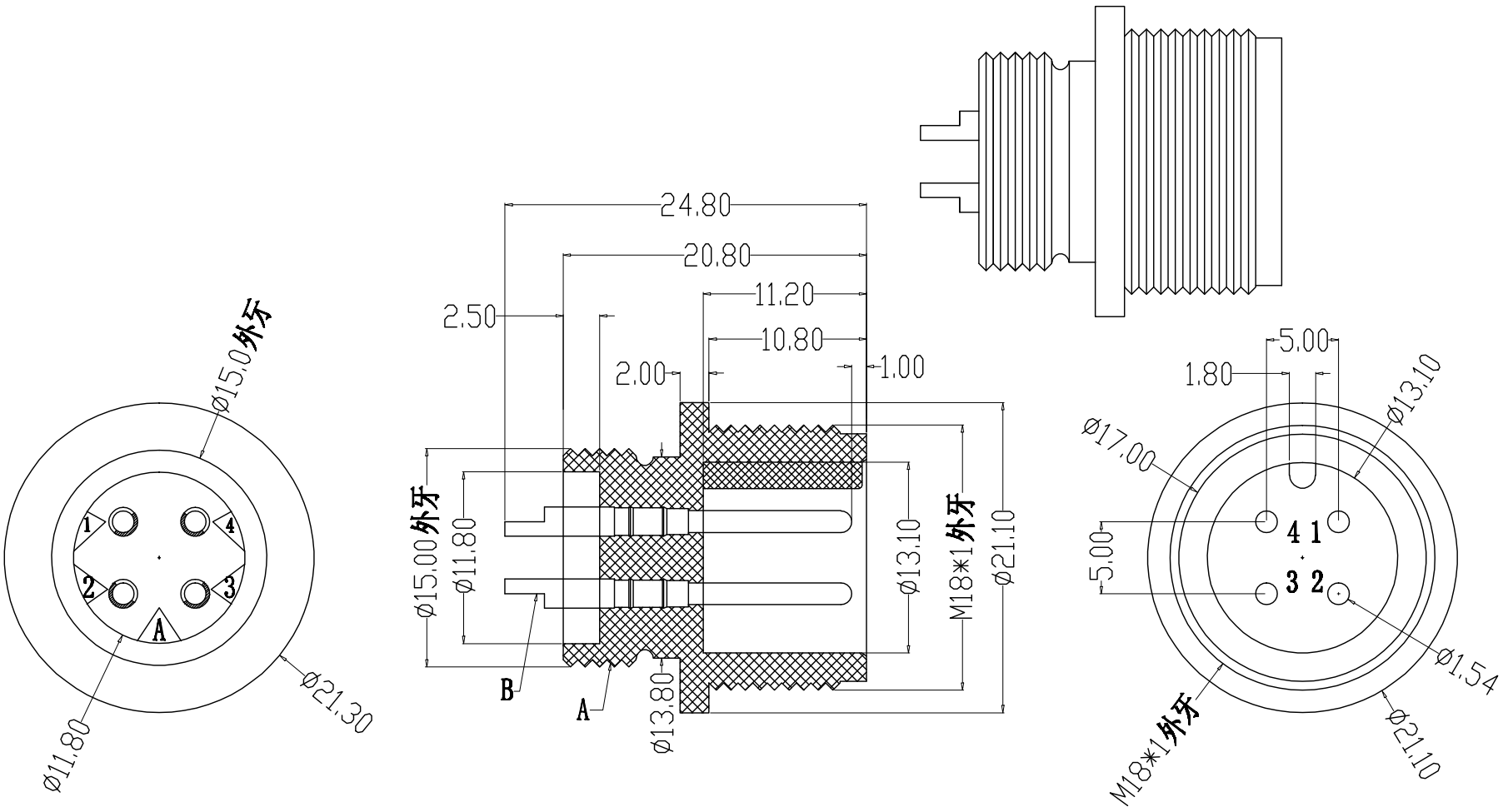

Engagement force	≤50N	Rated volage	60V
Disengagement force	≥15N	Rated current	7.5A
Mechanical lifespan	≥500	Insulation resistance	≥1000MΩ
IP rating	IP67/IP68	Contact resistance	≤20mΩ
Flammability	UL94 V-0	Operation Temperature	-40° C~105° C

	PARTS	MATERIALS	TREATMENT	AMOUNT
A	HOUSING	PA66+GF	SPECIFY COLOR	1
B	CONTACT	BRASS	GOLD PLATED	4
C				
D				
E				
F				

东莞市昌骏电子有限公司

TOLERANCE
.xxx ±0.05
.xx ±0.10
.x ±0.30
x ±0.50
ANGLE ± 1°

TITLE: M18防水4P线端公头

PART NO: JH-M18AX04-H01

DRAWING NO.: CP-M180003

SHEET: 1 / 1 | SCALE: 1 : 1 | UNIT: mm | SIZE: A4 | REV A/0

DRAWN: Xie Wenjun | CHECK: Long Jichang | DATE: 2019-12-02

由 Autodesk 教育版产品制作