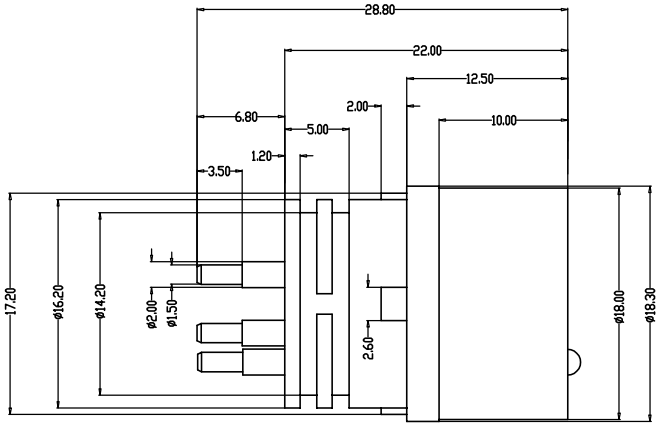

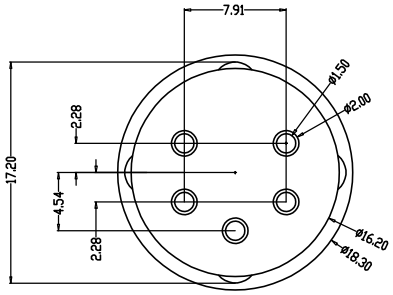

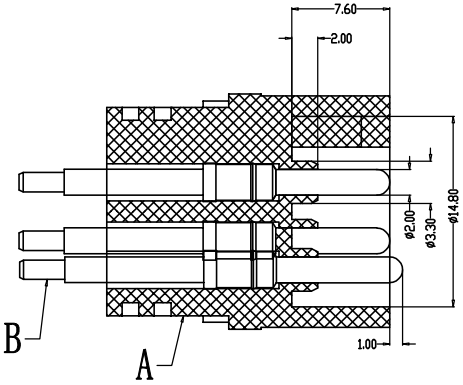

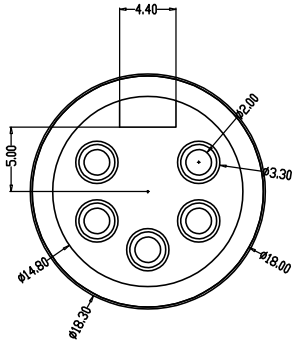

					PARTS	MATERIALS	TREATMENT	AMOUNT
				A	HOUSING	PA66+GF	SPECIFY COLOR	1
Engagement force	≤60N	Rated volage	250V	B	CONTACT	BRASS	GOLD PLATED	5
Disengagement force	≥20N	Rated current	20A	C				
Mechanical lifespan	≥500	Insulation resistance	≥1000M Ω	D				
IP rating	IP67/IP68	Contact resistance	≤20m Ω	E				
Flammability	UL94 V-0	Operation Temperature	-40° C~105° C	F				

Dongguan Changjun ElectronicsCo.,LTD
东莞市昌骏电子有限公司

TOLERANCE
.xxx ±0.05
.xx ±0.10
.x ±0.30
x ±0.50
ANGLE ± 1°

TITLE: 7/8-16UN2A防水5P板端公头主体28.8L

PART NO:	DRAWING NO.:
CJ-M23ABB5-M01-28.8L	CP-M230017

SHEET:	SCALE:	UNIT:	SIZE:	REV
1 / 1	1 : 1	mm	A4	A/0

DRAWN:	CHECK:	DATE:
Xie Wenjun	Long Jichang	2023-07-27