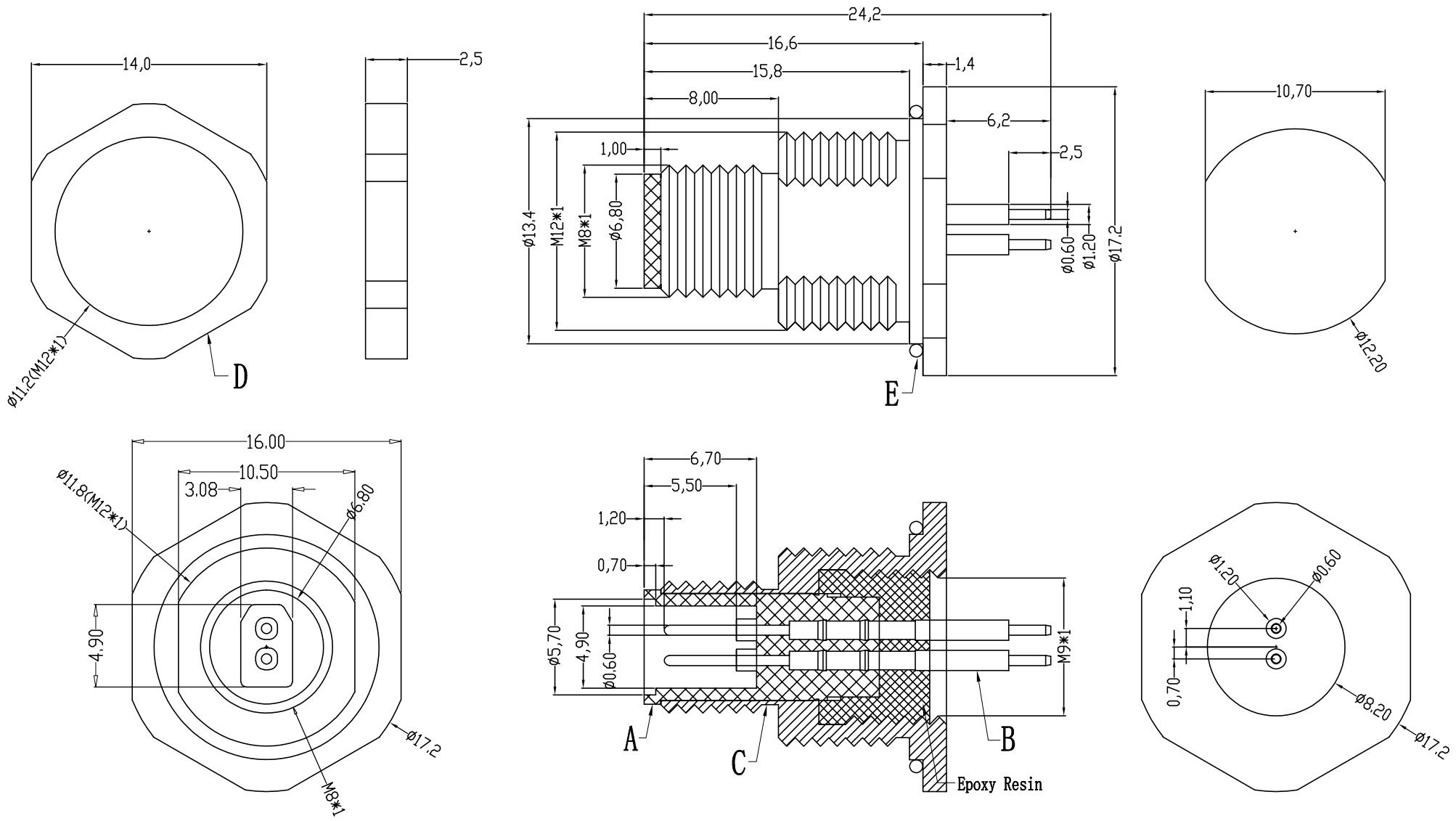

Engagement force	≤40N	Rated volage	72V DC
Disengagement force	≥5N	Rated current	2A
Mechanical lifespan	≥500	Insulation resistance	≥1000M Ω
IP rating	IP67/IP68	Contact resistance	≤10m Ω
Flammability	UL94 V-0	Operation Temperature	-25° C~85° C

	PARTS	MATERIALS	TREATMENT	AMOUNT
A	HOUSING	PA66+GF	SPECIFY COLOR	1
B	CONTACT	BRASS	GOLD PLATED	2
C	OUTER CONTACT	BRASS	NICKL PLATED	1
D	NUT	BRASS	NICKL PLATED	1
E	O-RING	EPDM	SPECIFY COLOR	1
F				

Dongguan Changjun Electronics Co.,Ltd
东莞市昌骏电子有限公司

TOLERANCE
.xxx ±0.05
.xx ±0.10
.x ±0.30
x ±0.50
ANGLE ± 1°

TITLE: M8-SPE防水2P板端公头 前锁面板式M12 SW16T-24.2L

PART NO: CJ-M8CXB2SPE-M01Q-M12SW16T-24.2L

DRAWING NO.: CP-M80094

SHEET:	SCALE:	UNIT:	SIZE:	REV
1 / 1	1 : 1	mm	A4	A/0

DRAWN:	CHECK:	DATE:
Xie Wenjun	Long Jichang	2023-05-09