由 Autodesk 教育版产品制作

	2pin	3pin	4pin	5pin	6pin	8pin
图形						
CODE	A-code	A-code	A-code	B-code	A-code	A-code
X值	1.00	1.00	1.00	1.00	0.72	0.60

Recommended Panel Cut-out

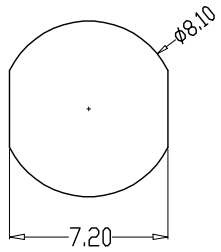

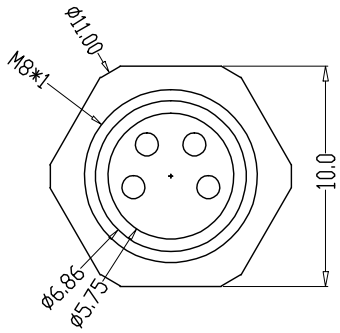

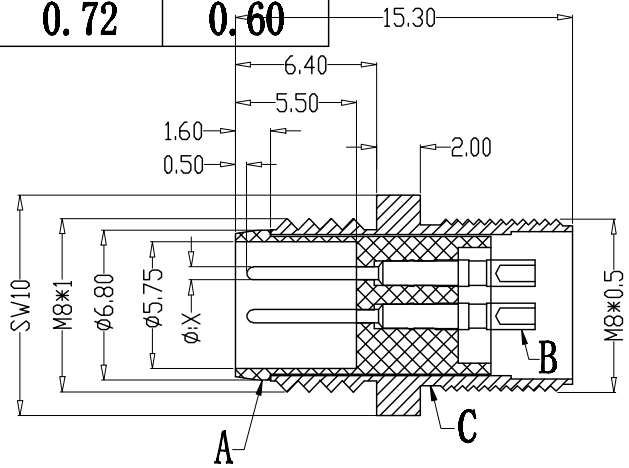

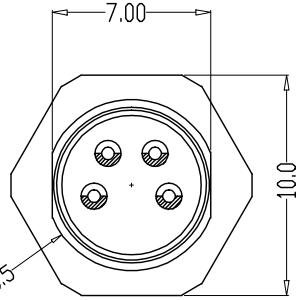

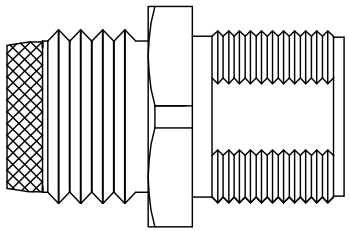

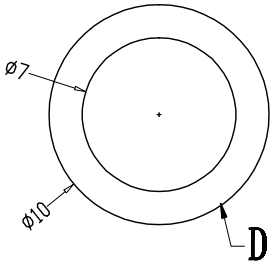

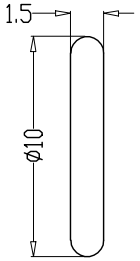

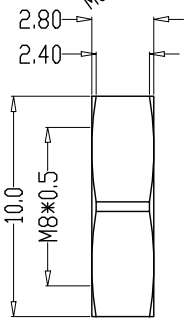

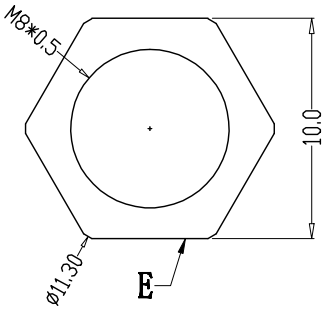

Engagement force	≤50N	Rated volage	2-5pin:60V DC 6-8pin:30V DC
Disengagement force	≥5N	Rated current	2-5pin:4A 6-8pin:2A
Mechanical lifespan	≥500	Insulation resistance	≥1000MΩ
IP rating	IP67/IP68	Contact resistance	≤10mΩ
Flammability	UL94 V-0	Operation Temperature	-40° C~105° C

	PARTS	MATERIALS	TREATMENT	AMOUNT
A	HOUSING	PA66+GF	SPECIFY COLOR	1
B	CONTACT	BRASS	GOLD PLATED	2~8
C	OUTER CONTACT	BRASS	NICKL PLATED	1
D	O-RING	EPDM	BLACK	1
E	NUT	BRASS	NICKL PLATED	1
F				

Dongguan Changjun Electronics Co.,Ltd
东莞市昌骏电子有限公司

TOLERANCE
.xxx ±0.05
.xx ±0.10
.x ±0.30
x ±0.50
ANGLE ±1°

TITLE: M8防水2~8P线端公头 后锁面板式M8 SW10T-13.7L后螺胶

PART NO: CJ-M8XXH(2~8)-M01H-M8SW10T-13.7L

DRAWING NO.: CP-M80034

SHEET:	SCALE:	UNIT:	SIZE:	REV
1 / 1	1 : 1	mm	A4	A/0

DRAWN:	CHECK:	DATE:
Xie Wenjun	Long Jichang	2022-01-05

由 Autodesk 教育版产品制作