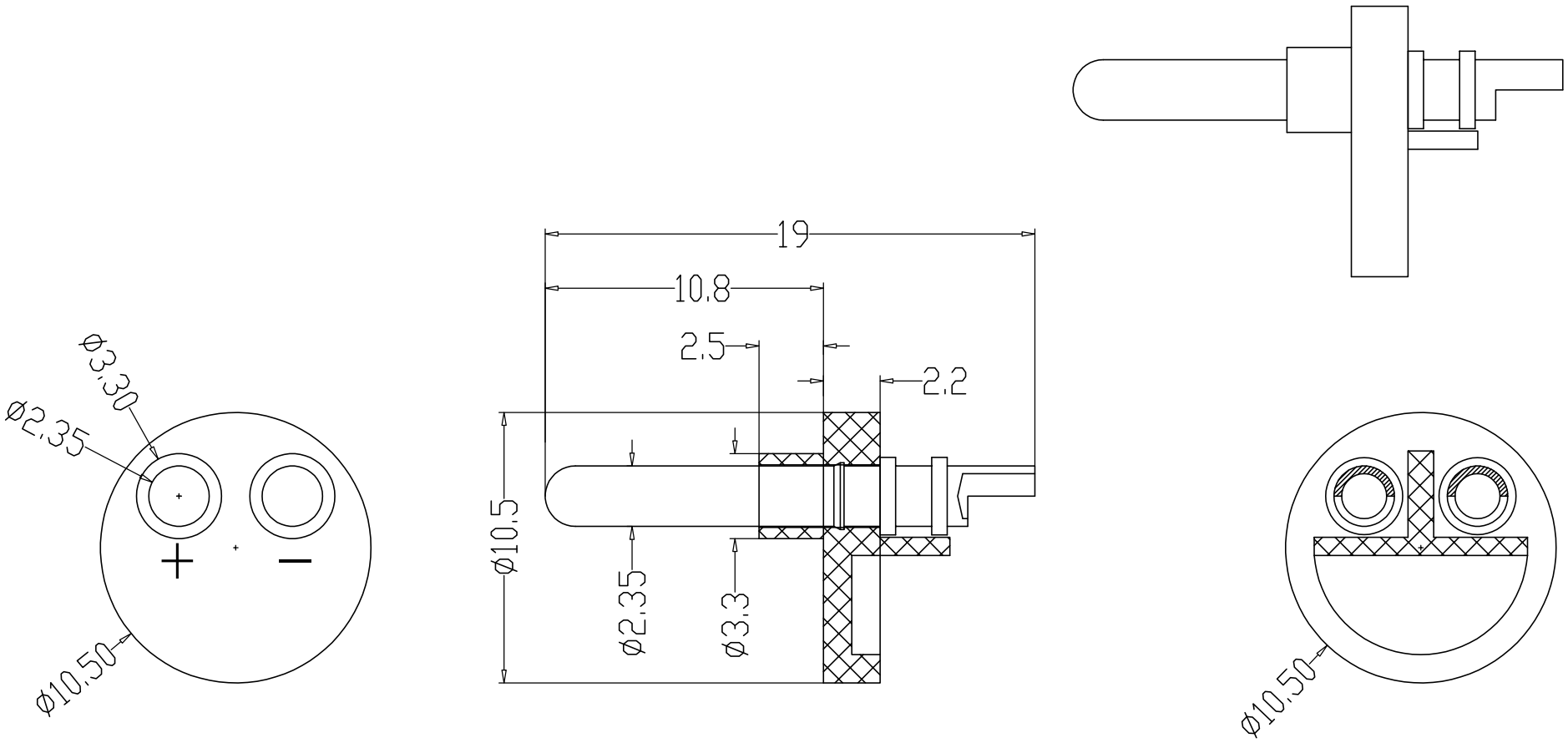

Engagement force	≤30N	Rated volage	**220V**
Disengagement force	≥5N	Rated current	**25A**
Mechanical lifespan	≥500	Insulation resistance	≥1000M Ω
IP rating	IP65/IP67	Contact resistance	≤10m Ω
Flammability	UL94 V-0	Operation Temperature	-40° C~105° C

	PARTS	MATERIALS	TREATMENT	AMOUNT
A	HOUSING	PA66+GF	NATURAL COLOR	1
B	CONTACT	BRASS	GOLD PLATED	2
C				
D				
E				
F				

Dongguan Changjun ElectronicsCo.,LTD
东莞市昌骏电子有限公司

TOLERANCE
.xxx ±0.05
.xx ±0.10
.x ±0.30
x ±0.50
ANGLE ± 1°

TITLE: **F10.5圆形电源防水2P线端公头**

PART NO: CJ-F10.5DY2-M01		DRAWING NO.: CP-F10.5DY001		
SHEET: 1 / 1	SCALE: 1 : 1	UNIT: mm	SIZE: A4	REV A/0
DRAWN: Xie Wenjun	CHECK: Long Jichang	DATE: 2023-02-25		