由 Autodesk 教育版产品制作

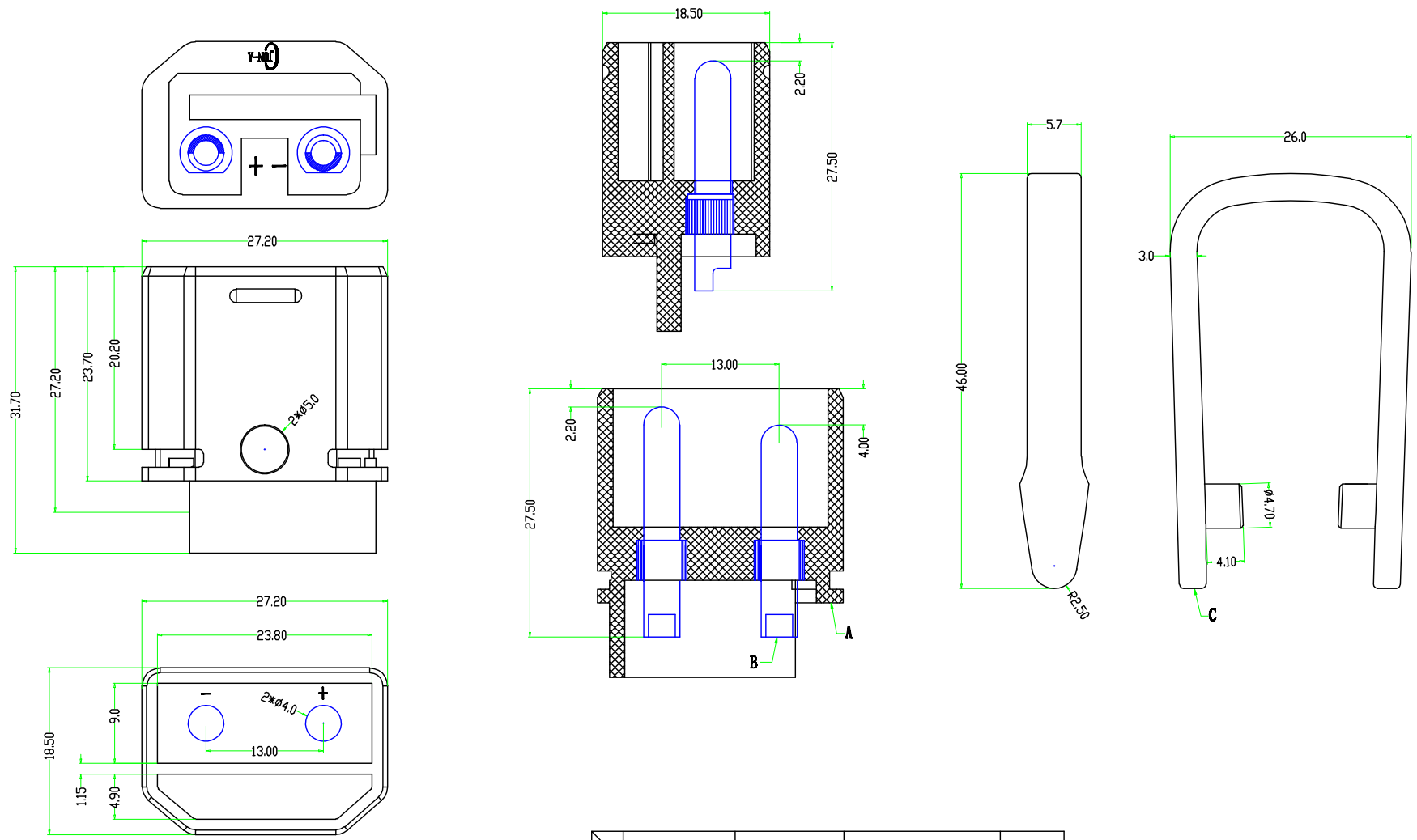

	PARTS	MATERIALS	TREATMENT	AMOUNT
A	HOUSING	PA66+GF	BLACK	1
B	CONTACT	BRASS	GOLD PLATED	2
C	HAND RING	PA66+GF	BLACK	1
D				
E				
F				

Engagement force	≤80N	Rated volage	220V
Disengagement force	≥35N	Rated current	60A
Mechanical lifespan	≥500	Insulation resistance	≥1000MΩ
IP rating	IP65/IP67	Contact resistance	≤10mΩ
Flammability	UL94 V-0	Operation Temperature	-40° C~105° C

Dongguan JunHao Interconnection Technology Co.,Ltd

东莞市俊豪互联科技有限公司

TOLERANCE
.xxx ±0.05
.xx ±0.10
.x ±0.30
x ±0.50
ANGLE ± 1°

TITLE: 菱形电源防水2P(8孔2)线插公头

PART NO: JH-LXDY3-001

DRAWING NO.: CP-LXDY0003

SHEET:	SCALE:	UNIT:	SIZE:	REV
1 / 1	1 : 1	mm	A4	A/0

DRAWN:	CHECK:	DATE:
Xie Wenjun	Long Jichang	2022-01-05

由 Autodesk 教育版产品制作