由 Autodesk 教育版产品制作

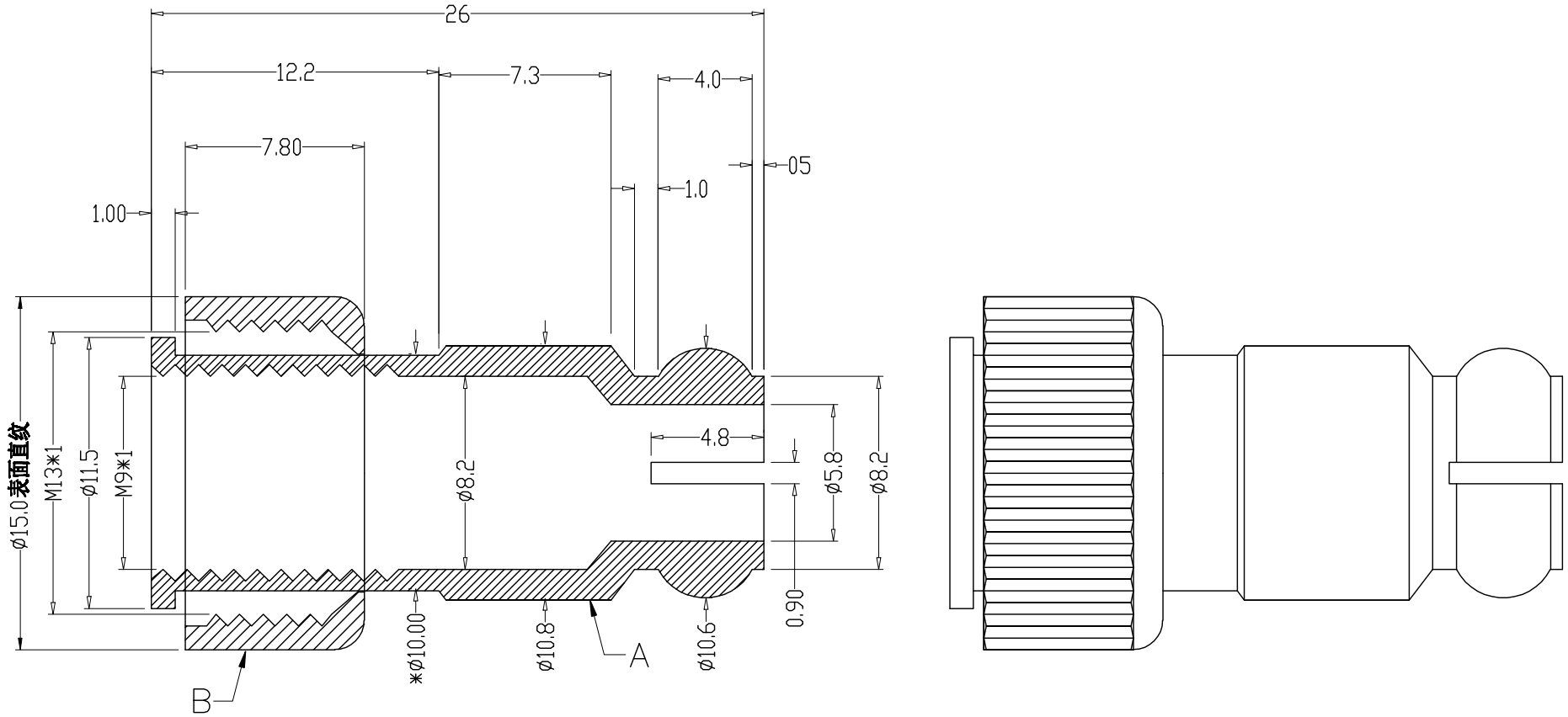

	PARTS	MATERIALS	TREATMENT	AMOUNT
A	CONTACT	BRASS	NICKL PLATED	1
B	NUT	BRASS	NICKL PLATED	1
C				
D				
E				
F				

Engagement force		Rated volage	
Disengagement force		Rated current	
Mechanical lifespan		Insulation resistance	
IP rating		Contact resistance	
Flammability		Operation Temperature	

东莞市昌骏电子有限公司

TOLERANCE
.xxx ±0.05
.xx ±0.10
.x ±0.30
x ±0.50
ANGLE ± 1°

TITLE: GX12航空母头外壳26L+螺母

PART NO: CJ-GX12NK-F01-26L

DRAWING NO.: WJ-GX120006

SHEET: 1 / 1 | SCALE: 1 : 1 | UNIT: mm | SIZE: A4 | REV A/0

DRAWN: Xie Wenjun | CHECK: Long Jichang | DATE: 2022-01-05

由 Autodesk 教育版产品制作